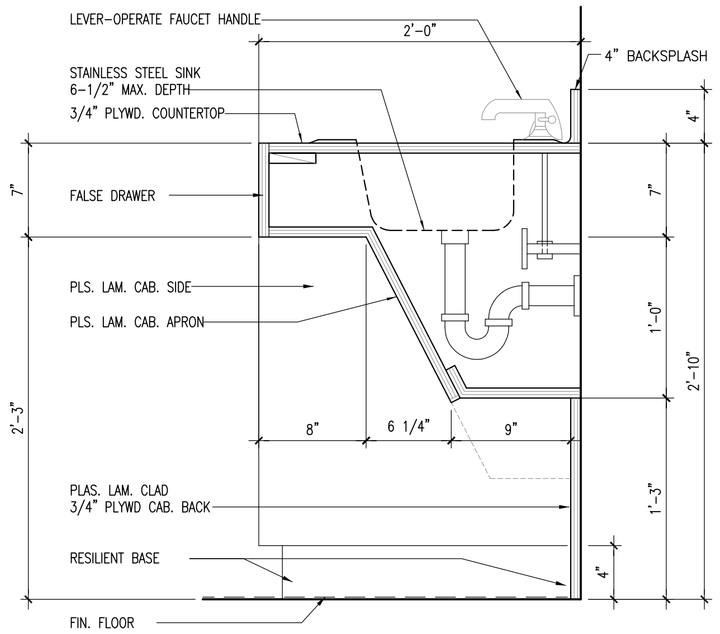

ADA SINK CABINET 1-1/2" =1'-0" 09

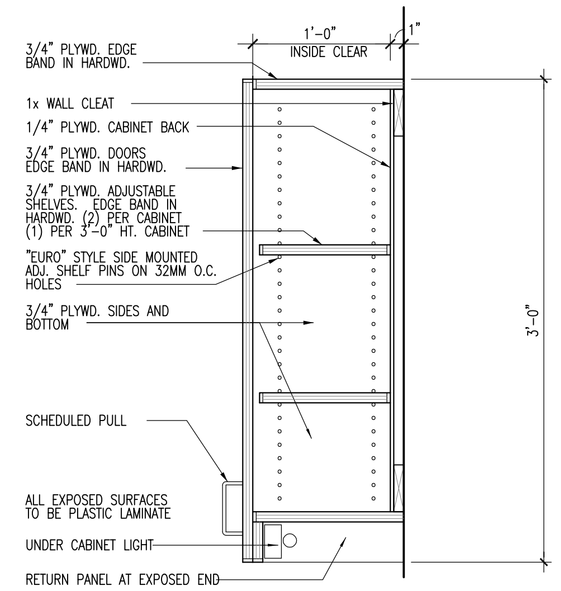

UPPER CABINET DETAIL 1-1/2" =1'-0" 06

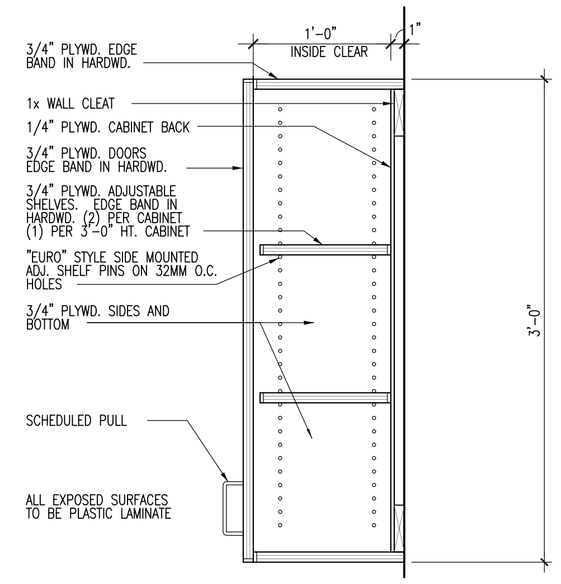

UPPER CABINET DETAIL 1-1/2" =1'-0" 03

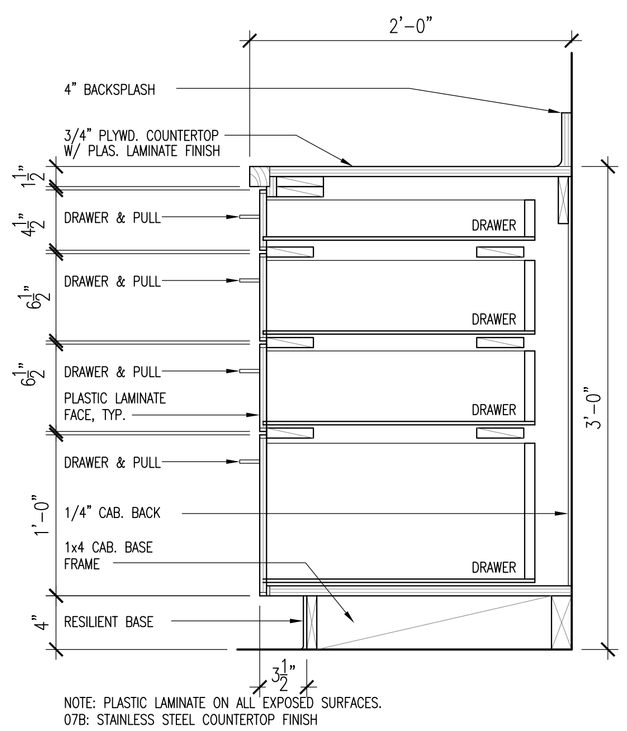

NOTE: PLASTIC LAMINATE ON ALL EXPOSED SURFACES.
07B: STAINLESS STEEL COUNTERTOP FINISH

BASE CABINET WITH 4 DRAWERS 1-1/2" =1'-0" 08

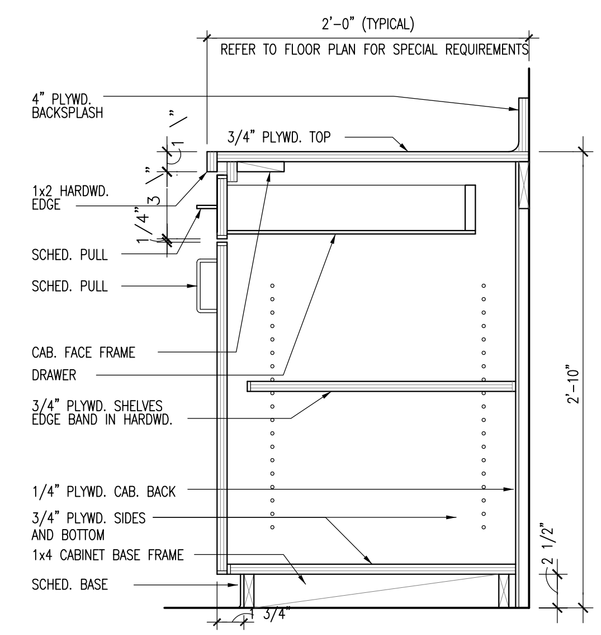

BASE CABINET WITH DRAWER 05

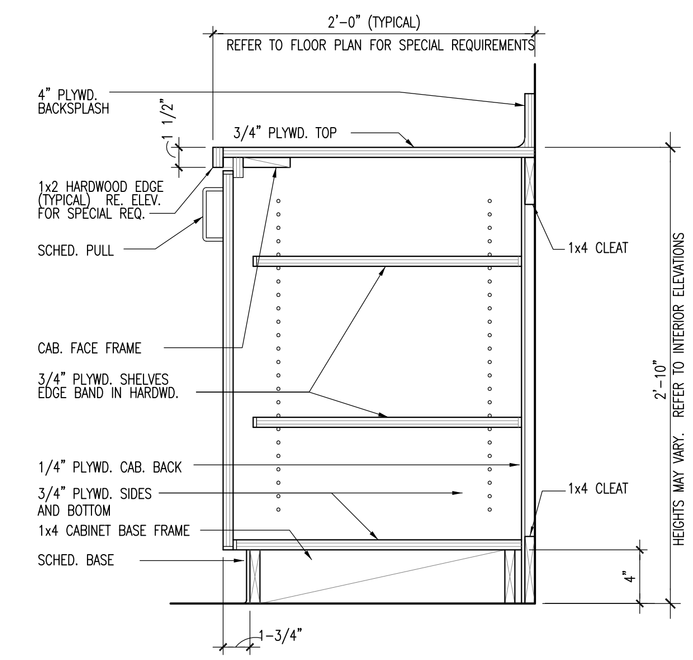

BASE CABINET 1-1/2" =1'-0" 02

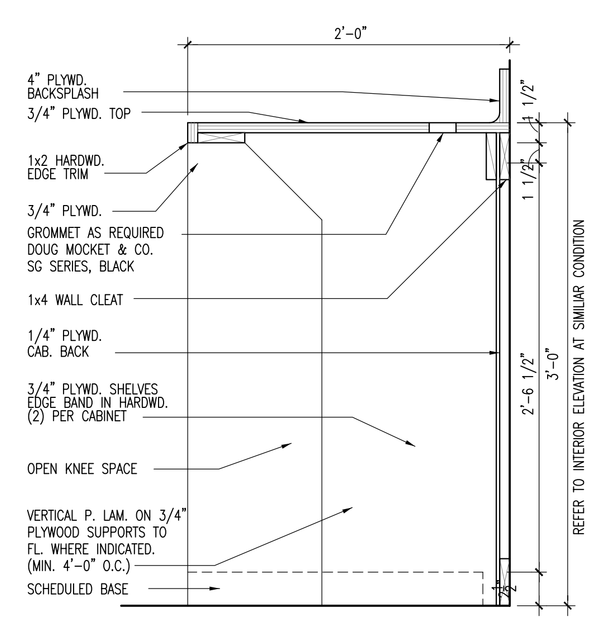

WORK SURFACE AND SUPPORT 1-1/2" =1'-0" 07

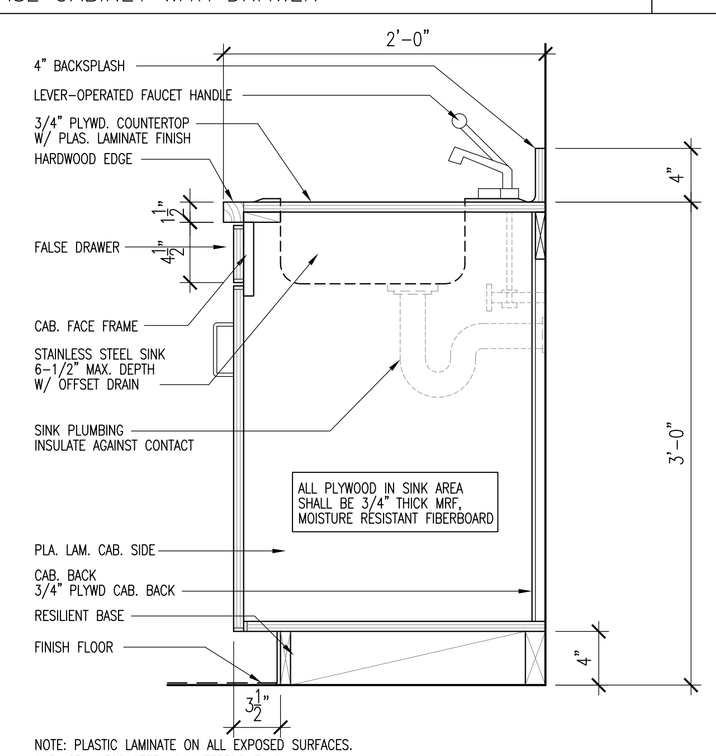

NOTE: PLASTIC LAMINATE ON ALL EXPOSED SURFACES.
01B: STAINLESS STEEL COUNTERTOP FINISH

SINK DETAIL 1-1/2" =1'-0" 04

ITEM	MANUFACTURER & NO.	FINISH
HINGE	. AT TOP, MIDDLE, & BOTTOM. (EQUAL)	US28
Pull	.	US28
Catch	.	US28
DRAWER GLIDES	. ONE PAIR PER DRAWER	
CABINET SHELF STDS. & BRACKETS	.	
OPEN SHELVING STDS. & BRACKETS	. "WHITE" PAINTED FINISH AT 3'-0" O.C. MINIMUM 2 PER SHELF.	

MILLWORK HARDWARE NOTES

1. All shelving is to comply with AWI Section 600 custom grade. All case work is to comply with AWI Section 400 premium grade.
2. Provide all finishes as referenced on elevations and as coded on the finish sheet.
3. Provide typical cabinets hardware unless noted otherwise on elevations.
4. All dimensions are to be field verified.
5. Dimensions between standards for shelving not to exceed 3'-0" O.C. unless noted otherwise.
6. Dimensions from end of shelf to standard not to exceed 6".
7. All exposed surfaces of millwork to be plastic laminate clad unless noted otherwise. Tops and splash: "Nevamar" S-6-24T. Faces & verticals: "Nevamar" S-2-69T.
8. All semi-exposed surfaces of millwork to be white melamine unless noted otherwise.
9. All wall hung millwork to have required concealed blocking for support.

MILLWORK, HARDWARE AND NOTES 01

REGISTERED ARCHITECT JAMES B. GWIN, JR. 4494 STATE OF TEXAS
11-22-10

Copyright © 2010
Jim Gwin AIA,
All Rights Reserved

ISSUE FOR:
PRICING & PERMIT
11/22/2010

EL CENTRO DE CORAZÓN
ALTERATIONS

SOUTHEAST COMMUNITY SERVICE CENTER
5901 LONG DRIVE HOUSTON, TEXAS 77087
MENTAL HEALTH, MENTAL RETARDATION
AUTHORITY OF HARRIS COUNTY

JIM GWIN ARCHITECTS
3100 EDLOE SUITE 320
HOUSTON, TEXAS 77027 (713)529-6262
BUILDING ARCHITECTS: jimgwin@jimgwinarc
WEBSITE: jimgwin.com

PROJECT NUMBER
.
DRAWN BY
AY
CHECKED BY
JBG
SHEET DATE
11/22/2010

MILLWORK DETAILS

TD2